"Yぅ / Descriptions

BRCL4056SE ESOP-8 /
BRCL4056SE
BRCL4056SE 4.2V 1%

BRCL4056SE 2uA

1.0A
4.5~6.5V
MOSFET
4.2V ±1%
/ /

ESOP-8

,
, MP3

USB

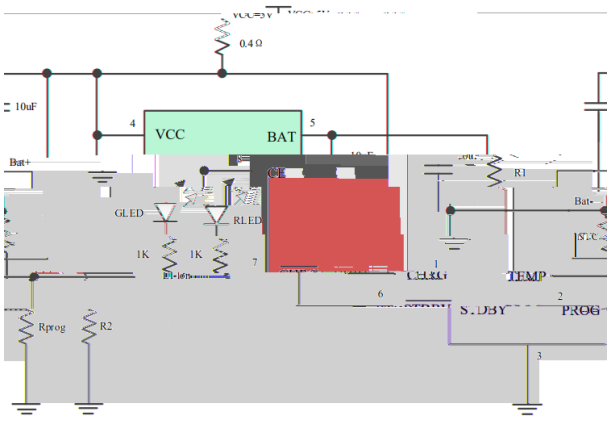

BRCL4056SE

≠ ∧ ∃ Ạ / Electrical Characteristics(Ta=25)

PARAMETER	SYMBOL	CONDITIONS	MIN	TYP	MAX	UNITS
Input Supply Voltage			4.5		6.5	V
V_{CC} Under voltage Lockout Threshold	V_{UVL}	V_{CC} from Low to High		3.9		V
V_{CC} Under voltage Lockout Hysteresis	V_{UVL}			150		mV
Input Supply Current	I_{CC}	Charge Mode, R_{PROG}=10K		150	500	µA
		Standby Mode (Charge Terminated)		50	100	
		Shutdown Mode: R_{PROG} Not Connected, V_{CC}<V_{BAT}, or V_{CC}<V_{UVL}		50	100	
CE "High" Level Voltage	V_{CEH}		1.5		V_{CC}	V
CE "Low" Level Voltage	V_{CEL}				0.4	V
Trickle Charge Threshold	V_{TRIKL}	R_{PROG}=10K, V_{BAT} Rising		2.9		V
Trickle Charge Hysteresis	V_{TRIKL}	R_{PROG}=10K		100		mV
Trickle Charge Current	I_{TRIKL}	R_{PROG}=1K	90	100	110	mA
BAT Pin Current	I_{BAT}	R_{PROG}=1K, Current Mode(V_{BAT}=4.0V)	900	1000	1100	mA
		R_{PROG}=2K, Current Mode(V_{BAT}=4.0V)	450	500	550	
		Standby Mode, V_{BAT}=V_{FLOAT}	0	-2.5	-6.0	µA
		Shutdown Mode (R_{PROG} Not Connected)		± 1	± 2	
		Sleep Mode, V_{CC}=0V			-2	
PROG Pin Voltage	V_{PROG}	R_{PROG}=1K, Current Mode	0.9	1.0	1.1	V
PROG Pin Pull-Up Current	I_{PROG}			3		µA
Regulated Output (Float) Voltage	V_{FLOAT}	R_{PROG}=10K	4.158	4.200	4.242	V
C/10 Termination Current Threshold	I_{TERM}	R_{PROG}=1K		0.1		mA/mA

≠ ∧ ∃ Ạ / Electrical Characteristics(Ta=25)

PARAMETER	SYMBOL	CONDITIONS	MIN	TYP	MAX	UNITS
Termination Comparator Filter Time	t_{Term}	I_{BAT} Falling Below I_{TERM}	0.3	0.8	2.0	mS
Recharge Battery Threshold	V_{RECHG}	V_{FLOAT} V_{RECHG}		150		mV
Recharge Comparator Filter Time	$t_{RECHARGE}$	V_{BAT} High to Low	0.3	0.8	2.0	mS
V_{CC} – V_{BAT} Lockout Threshold	A_{MSD}	V_{CC} from Low to High		100		mV
		V_{CC} from High to Low		80		mV
TEMP High Shift Voltage Level			76	80	82	%V_{CC}
TEMP Low Shift Voltage Level			43	45	49	
Soft-Start Time	t_{SS}	I_{BAT}=0 to I_{BAT}=1000V/R_{PROG}		20		μS
Power FET “ON” Resistance (Between V_{CC} and BAT)	R_{ON}	I_{BAT}=1000mA		400		mΩ
Junction Temperature in Constant Temperature Mode	$T_{J(REG)}$			125		°C

υ Þ ‘ ƒ / Principle block diagram

